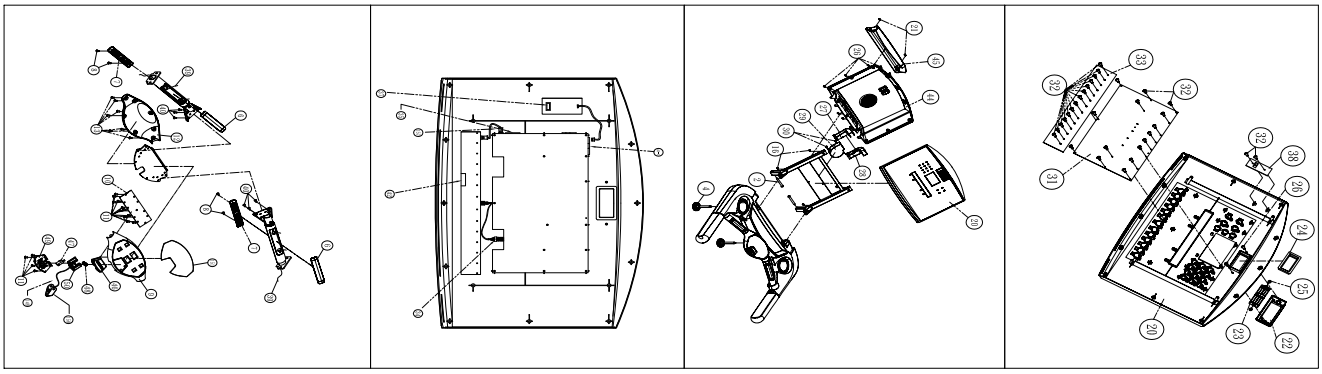

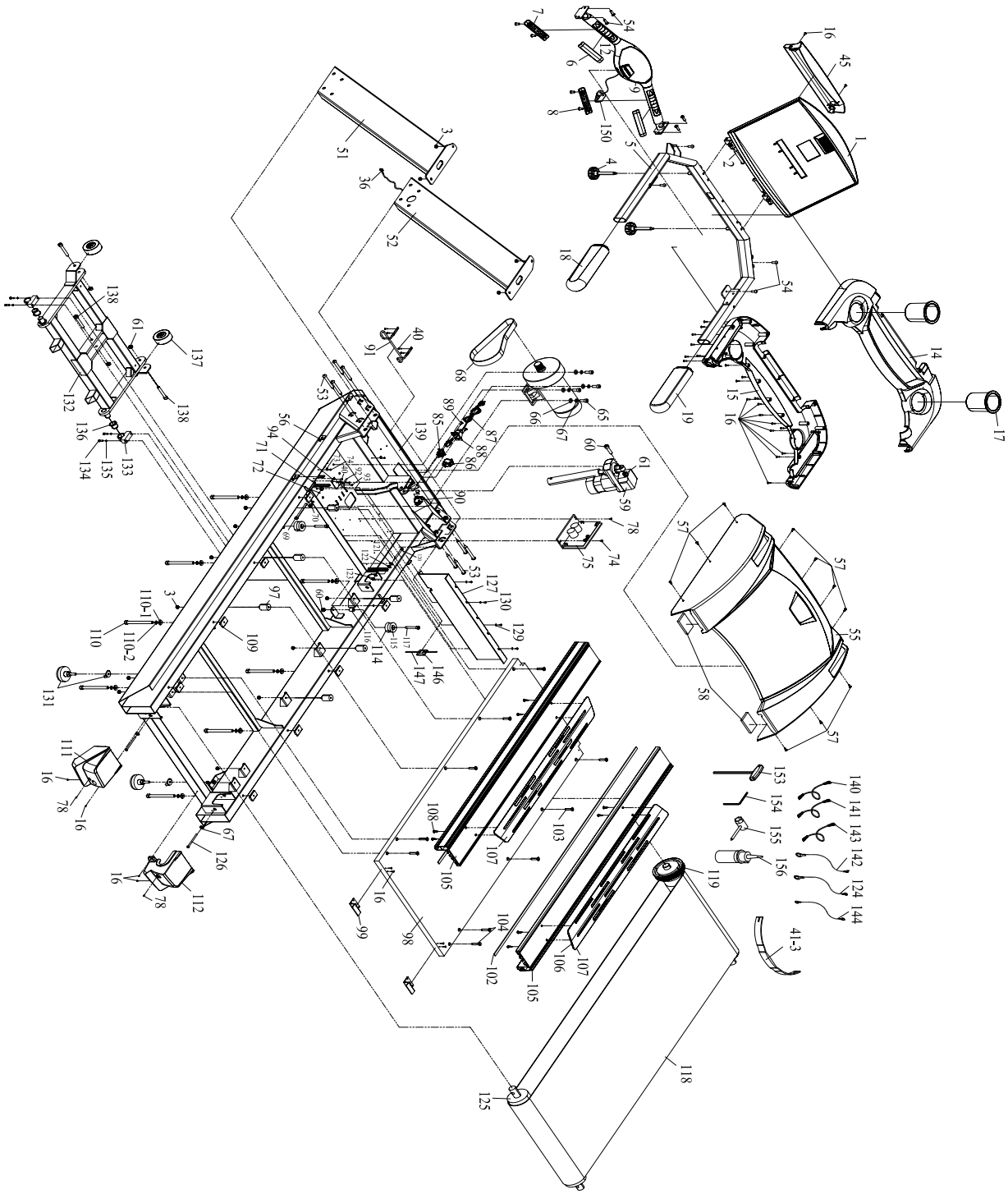



BH Fitness • 20155 Ellipse • Foothill Ranch • CA • 92610
www.bhfitness.com • Phone 949-206-0330 • Fax 949-206-0013

# T11 Part List

| Item | Description | Qty | Item | Description | Qty |
|---|---|---|---|---|---|
| 1 | Computer Assembly | 1 | | | |
| 2 | Truss Hex Screw | 2 | 82 | Connecting Board(A.C Motor) | 1 |
| 3 | Nylon Nut | 14 | 83 | Hex Iron Post | 2 |
| 4 | Plastic Handle | 2 | 84 | PC Board Isolation Post | 1 |
| 5 | Stuff Holder Assembly | 1 | 85 | Power Cord Socket | 1 |
| 6 | Hand Pulse Plastic Set(Upper) | 2 | 86 | Power Switch | 1 |
| 7 | Hand Pulse Plastic Set(Lower) | 2 | 87 | Power Cord | 1 |
| 8 | Round Head Philips Self Tapping Screw | 4 | 88 | Power Cord Switch Cover | 1 |
| 9 | Upper Control Box Cover | 1 | 89 | Truss Philips Screw | 2 |
| 10 | Control Box Board APM KB1004 | 1 | 90 | Circuit Breaker | 1 |
| 11 | Round Head Philips Self Tapping Screw | 14 | 91 | Power Cord Collector | 1 |
| 12 | Lower Control Box Cover | 1 | 92 | Sensor | 1 |
| 13 | Truss Philips Self Tapping Screw | 7 | 93 | Truss Philips Screw | 2 |
| 14 | Upper Stuff Box Cover | 1 | 94 | Sensor Fixing Plate | 1 |
| 15 | Lower Stuff Box Cover | 1 | 95 | Wire Fixing Knob | 2 |
| 16 | Truss Philips Self Tapping Screw | 34 | 96 | Wire Fixing Knob | 1 |
| 17 | Bottle | 2 | 97 | Fixed Cushion | 6 |
| 18 | PU Handrail(Left) | 1 | 98 | Running Board | 1 |
| 19 | PU Handrail(Right) | 1 | 99 | Running Board Extensive Part | 2 |
| 20 | Upper Computer Cover | 1 | 100 | Grounding Decal | 2 |
| | | | 101 | Grounding Decal | 3 |
| 22 | Fan Cover | 1 | 102 | Foam Sticker | 2 |
| 23 | Fan Adjustment Plastic | 1 | 103 | Counter Sink Hex Screw | 6 |
| 24 | Vent Rubber | 1 | 104 | Counter Sink Hex Screw | 4 |
| 25 | O-Shaped Ring | 2 | 105 | Plastic Pedal | 2 |
| 26 | Truss Philips Self Tapping Screw | 14 | 106 | Double Sided Tape | 2 |
| 27 | Vessel(Left) Explorer | 1 | 107 | Pedal Decoration String | 2 |
| 28 | Vessel(Right) Explorer | 1 | 108 | Round Head Philips Self Tapping Screw | 8 |
| 29 | Right Turbofan | 1 | 109 | Pedal Fixing Plate | 8 |
| 30 | Round Head Philips Screw | 2 | 110 | Allen Screw | 8 |
| 31 | Computer apm B1-F | 1 | 110-1 | Washer | 8 |
| 32 | Round Head Philips Self Tapping Screw | 31 | 110-2 | Spring Washer | 8 |
| 33 | Key Board APM KB2008 | 1 | 111 | Rear End Cap(Left) | 1 |
| 34 | 10PIN Wire (350mm) | 1 | 112 | Rear End Cap(Right) | 1 |
| 35 | Control Wire(Upper) | 1 | | | |
| 36 | Control Wire(Lower) | 1 | 114 | Assistant Wheel | 2 |
| 37 | Hand Pulse Wire(Upper) DK800T | 1 | | | |
| 38 | Hand Pulse Wire(260mm) | 1 | 116 | Bushing | 2 |



BH Fitness • 20155 Ellipse • Foothill Ranch • CA • 92610
www.bhfitness.com • Phone 949-206-0330 • Fax 949-206-0013

# T11 Part List (cont'd)

| Item | Description | Qty |
|---|---|---|
| 39 | Hand Pulse Wire(Lower) DK800T | 2 |
| 40 | Truss Philips Screw | 19 |
| 41 | Wireless POLAR Pulse Receiver RV-510 | 1 |
| 41-1 | POLAR Receiver RE06 Connecting Wire | 1 |
| 41-2 | Double Sided Tape 20mmx20mmx3.0t Black | 1 |
| 41-3 | Chest Belt Pulse Emitter | 1 |
| 42 | Control Bd Connecting Wire(Upper) DK800T | 1 |
| 43 | Control Bd Connecting Wire(Lower0 DK800T | 1 |
| 44 | Lower Computer Cover | 1 |
| 45 | Computer Decoration Cover | 1 |
| 46 | Safety Key Button | 1 |
| 47 | Safety Key Sensor Microadjustment | 1 |
| 48 | Spring | 1 |
| 49 | Safety Key Base | 1 |
| 50 | Safety Key Slip Base | 1 |
| 51 | Upright(Left) | 1 |
| 52 | Upright(Right) | 1 |
| 53 | Truss Hex Screw | 8 |
| 54 | Truss Hex Screw | 8 |
| 55 | Motor Cover | 1 |
| 56 | Motor Cover Fixing Plate | 6 |
| 57 | Truss Philips Screw | 10 |
| 58 | Foam Sticker | 2 |
| 59 | Incline Motor | 1 |
| 60 | CKS Hex Screw | 1 |
| 61 | Nylon Nut | 6 |
| 62 | Motor | 1 |
| 65 | CKS Hex Screw | 4 |
| 66 | Flat Washer | 4 |
| 67 | Spring | 6 |
| 68 | Drive Belt | 1 |
| 69 | CKS Hex Screw | 1 |
| 70 | Hex Nut | 1 |
| 71 | Adjustment Screw Cap | 1 |
| 72 | Washer | 1 |
| 73 | Wire Fixing Knob | 4 |
| 74 | Round Head Philips Screw | 3 |
| 75 | Controller | 1 |
| 78 | Round Head Philips Screw | 3 |

| Item | Description | Qty |
|---|---|---|
| 117 | CKS Hex Screw | 2 |
| 118 | Running Belt | 1 |
| 119 | Front Roller 8T | 1 |
| 120 | CKS Hex Screw | 1 |
| 121 | Flat Washer | 1 |
| 122 | Inner Toothed Washer | 1 |
| 123 | Hex Nut | 1 |
| 124 | Extension Wire(Kelly) | 1 |
| 125 | Rear Roller 8T | 1 |
| 126 | CKS Hex Screw | 2 |
| 127 | Board | 1 |
| 128 | Foam Sticker | 1 |
| 129 | Spring Washer | 4 |
| 130 | Truss Philips Screw | 4 |
| 131 | Adjustment Foot Pad | 2 |
| 132 | Incline Base Assembly | 1 |
| 133 | Incline Fixing Base | 2 |
| 134 | CKS Hex Screw | 4 |
| 135 | Spring Washer | 4 |
| 136 | Plastic Bushing | 2 |
| 137 | Wheel | 2 |
| 138 | CKS Hex Screw | 3 |
| 139 | Frame Assembly | 1 |
| 140 | Extension Wire(White) | 1 |
| 141 | Extension Wire(Black) | 2 |
| 142 | Extension Wire(Kelly) | 1 |
| 143 | Extension Wire(White) | 1 |
| 144 | Extension Wire(Kelly) | 1 |
| 145 | Truss Philips Self Tapping Screw | 1 |
| 146 | KSS Wire Clip Base | 7 |
| 147 | Belt | 7 |
| 148 | Guide Thread | 2 |
| 149 | Nylon Rope | 1 |
| 150 | Clip | 1 |
| 151 | Computer Control Box Decal | 1 |
| 152 | Computer Board Decal | 1 |
| 153 | T-Shaped Wrench | 1 |
| 154 | Hex Wrench | 1 |
| 155 | Sleeve Spanner+Screwdriver | 1 |
| 156 | Bottled Silicon DC-1000 | 1 |
| 157 | Safety Key Connecting Wire | 1 |



BH Fitness • 20155 Ellipse • Foothill Ranch • CA • 92610
www.bhfitness.com • Phone 949-206-0330 • Fax 949-206-0013